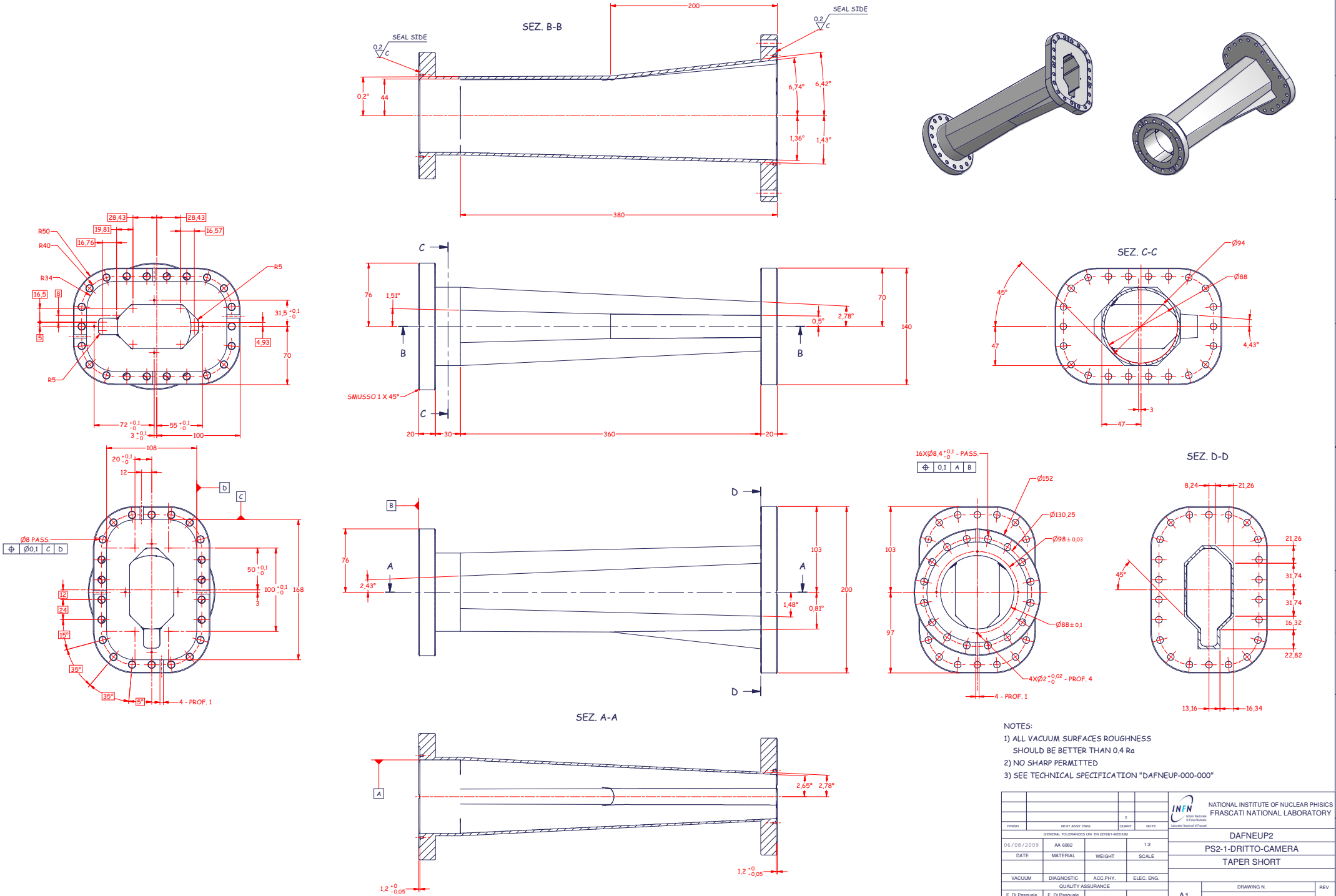

NOTES:

1) ALL VACUUM SURFACES ROUGHNESS SHOULD BE BETTER THAN 0.4 Ra
2) NO SHARP PERMITTED
3) SEE TECHNICAL SPECIFICATION "DAFNEUP-000-000"

		2	
FINISH	NEXT ASSY DWG.	QUANT.	NOTE
GENERAL TOLERANCES UNI EN 22768-1-MEDIUM			
06/08/2009	AA 6082		1:2
DATE	MATERIAL	WEIGHT	SCALE
VACUUM	DIAGNOSTIC	ACC.PHY.	ELEC. ENG.
QUALITY ASSURANCE			
E. Di Pasquale	E. Di Pasquale		
DRAFTER	DESIGNER	ENGINEER	APPROVAL

INFN Istituto Nazionale di Fisica Nucleare Laboratori Nazionali di Frascati

NATIONAL INSTITUTE OF NUCLEAR PHISICS
FRASCATI NATIONAL LABORATORY

DAFNEUP2

PS2-1-DRITTO-CAMERA

TAPER SHORT

A1

DRAWING N.: DAFNEUP2-012-000

REV